

- ***Constant Potential Output***
- ***Excellent Stability and Regulation***
- ***Power Factor Corrected AC Input Circuitry***
- ***Digital Interface, Ethernet and RS-232***
- ***End Grounded Exposed Anode***
- ***Portable, Repeatable, Accurate***
- ***100% Duty Cycle***
- ***Unparalleled Resolution Imaging***
- ***Liquid or Air Cooled Models***
- ***Penetration of up to 76mm of Fe (300kV unit)***

Spellman's SPX Series are perfectly suited for today's demanding NDT inspection requirements. SPX units are rugged, yet easy to transport and economical to maintain. They can be line or portable generator powered automatically adapting to standard input voltages to permit all day inspection under extreme conditions virtually anywhere.

The end grounded X-Ray tubes have a focal spot size of 1.5mm sq. and the exposed anode allows for easy and flexible positioning of the tube head assembly. Tube ports use a low-absorption beryllium window that allows the radiographer to utilize the full spectrum of X-Ray energy. The high radiation output of the SPX systems allow for lower kV per exposure, shorter exposure times and increased film contrast for superior radiographic imaging.



The SPX microprocessor-driven control unit provides automatic warm-up and comprehensive self-diagnostic circuitry. Memory to store and recall exposure techniques is standard and the last set of exposure parameters is retained before powering down. The SPX is adjustable in 1kV and 0.1mA increments. Exposure duration can be set from 1 second to 99 min 59 seconds in 1 second increments. There are three models to choose from: 160kV, 200kV and 300kV.

TYPICAL APPLICATIONS

- Aerospace
- Manufacturing
- Defense
- Aviation
- Energy
- Security Systems
- NDT Applications

SPECIFICATIONS

Input Line Requirements:

Automatically adapts to input line voltage
100-130Vac, 50/60Hz, 20 Amperes maximum
200-250Vac, 50/60Hz, 10 Amperes maximum
May also be portable-generator powered

X-Ray Output:

SPX160: 20 to 160kV, 0.5mA to 5.0mA (800 watts max.)
SPX200: 10 to 200kV, 0.5mA to 10.0mA (900 watts max.)
SPX300: 10 to 300kV, 0.5mA to 10.0mA (900 watts max.)
Constant potential, end-grounded anode,
air or liquid cooled versions available

X-Ray Tube Window:

SPX160: Beryllium 0.8mm (directional)
Nickel 0.6mm (panoramic)
SPX200: Beryllium 1.0mm
SPX300: Beryllium 1.0mm

Radiation Coverage:

SPX160: 40° directional or 360° panoramic tube available
SPX200: 40° directional or 360° panoramic tube available
SPX300: 40° x 60°

Radiation Output:

SPX160: 14R/min at 50cm filtered with 0.5 inches (12.7mm) aluminum at 160kV, 5mA
SPX200: 21R/min at 50cm filtered with 0.5 inches (12.7mm) aluminum at 200kV, 4.5mA
SPX300: 30R/min at 50cm filtered with 0.5 inches (12.7mm) aluminum at 300kV, 3mA

Radiation Leakage:

Less than 2.0 Roentgens per hour at 1 meter from the X-Ray tube target.

Spellman High Voltage Electronics Corporation
Corporate Headquarters
Hauppauge, New York USA
+1-631-630-3000 FAX: +1-631-435-1620
e-mail: sales@spellmanhv.com
www.spellmanhv.com
128121-001 REV. K
Spellman High Voltage is an ISO 9001 and ISO 14001 registered company
Copyright © 2017 Spellman High Voltage Electronics Corp.

Effective Focal Spot:

SPX160:

Standard: 1.5mm x 1.5mm (0.6in x 0.6in) EN12543

Panoramic: This tube has a flat target (0 degree) and therefore it is without dimension along the tube axis (other than panoramic tubes with conical targets). The true focal spot on the target can only be estimated by taking two focal spot film exposures in the main beam 90 degrees apart from each other. Due to this no focal spot is inferred.

SPX200:

Standard: 3mm x 3mm (0.12in x 0.12in) EN12543

Panoramic: 0.4mm x 4mm (0.016in x 0.16in) EN12543

SPX300:

Standard: 3mm x 3mm (0.12in x 0.12in) EN12543

Ambient Temp:
100% duty cycle @ 120°F (49°C)

Duty Cycle:
100% - liquid or air cooled

Operating Temp:
32°F to 120°F (0°C to 49°C)

Storage Temp:
-30°F to 160°F (-35°C to 71°C)

Anode Cooling:
Liquid coolant solution closed loop between X-Ray tube anode and cooling unit, or fan forced air cooling.

Liquid Cooling Unit Dimensions:
Please reference dimension drawings

Liquid Cooling Unit Weight:
54lbs. (15.4kg) approx.

Tube Head Dimensions:
Please reference dimension drawings

Tube Head Weight:

SPX160:
- Liquid Cooled: 29lbs. (13.15kg)
- Air Cooled: 33lbs. (14.97kg)
- Panoramic: 29lbs. (13.15kg)

SPX200:
- Liquid Cooled: 37lbs. (16.78kg)
- Air Cooled: 41lbs. (18.60kg)
- Panoramic: 37lbs. (16.78kg)

SPX300:
- Liquid Cooled: 98lbs. (44.5kg)
- Air Cooled: 105lbs. (47.61kg)

X-Ray Control Unit:
Digital microcomputer based with local control, RS-232 and Ethernet

X-Ray Control Unit Dimensions:
Please reference dimension drawings

X-Ray Control Unit Weight:
26lbs. (11.8kg) approx.

Safety Devices:
- Tubehead Pressure Relief Valve
- Tubehead Thermal Cut-Out
- Tubehead Pressure Gauge
- Tubehead Low Pressure Cut-Out @ 25psi (1.72 Bar)
- Coolant Flow Sensor (liquid cooled only)
- Control Unit Safety Keyswitch
- Microcomputer-based Self Diagnostics
- Continuous Exposure Parameter Display

Standard Accessories:
- Operation manual
- Tubehead carrying case
- Tubehead Cable- 100' with strain relief
- Extra key (1) for Control Unit Safety Lock
- Power cable - 25' with strain relief
- Coolant hose - twin, 50' with self-sealing terminations (liquid cooled only)
- Cooler power cable

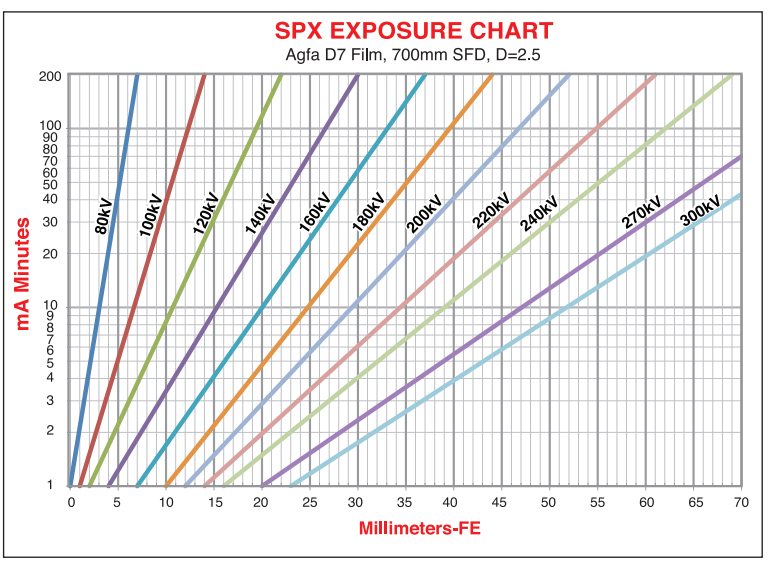

This chart is for reference only (actual settings may vary due to SFD, material, and film type)

Spellman High Voltage Electronics Corporation
Corporate Headquarters
Hauppauge, New York USA
+1-631-630-3000 FAX: +1-631-435-1620
e-mail: sales@spellmanhv.com
www.spellmanhv.com

Spellman High Voltage is an ISO 9001 and ISO 14001 registered company
Copyright © 2017 Spellman High Voltage Electronics Corp.

SPX160 MODEL SELECTION TABLE

MODEL NUMBER	DESCRIPTION
SPX160ACDBG	Air Cooled, 40° Directional Beam, Glass insert
SPX160LCDBG	Liquid Cooled, 40° Directional Beam, Glass insert
SPX160LCPANG	Liquid Cooled, PANoramic Beam, Glass insert

SPX200 MODEL SELECTION TABLE

MODEL NUMBER	DESCRIPTION
SPX200ACDBC	Air Cooled, 40° Directional Beam, metal Ceramic insert
SPX200LCPANC	Liquid Cooled, PANoramic beam, metal Ceramic insert
SPX200LCDBC	Liquid Cooled, 40° Directional Beam, metal Ceramic insert

SPX300 MODEL SELECTION TABLE

MODEL NUMBER	DESCRIPTION
SPX300LCDBC	Liquid Cooled, 40° Directional Beam, metal Ceramic insert
SPX300ACDBC	Air Cooled, 40° Directional Beam, metal Ceramic insert

SPX OPTIONS

MODEL NUMBER	DESCRIPTION
3-000-0754	SPX160/200 tubehead stand
3-000-0756	SPX300 tubehead stand
3-000-0792	Laser pointer for liquid cooled tube
K935	SPX160 Laser pointer for air cooled tube
K936	SPX200/300 Laser pointer for air cooled tube
K937	SPX200 Laser pointer for liquid cooled tube
K938	SPX300 Laser pointer for liquid cooled tube

SPX MAIN AC INPUT

Controller Side; Male, 3 pins MS type

PIN	SIGNAL
A	LINE 1 120/220Vac
B	LINE 2 Neutral 120/220Vac
C	Ground

SPX INTERLOCK CONNECTOR

Controller Side; Female, 8 pins MS type
Tube Side; Male, 8 pins MS type

PIN	SIGNAL
A	External Interlock
B	External Interlock
C	X-Ray ON External Light
D	External Lights Common
E	Pre-Warning External Light
F	External Light Confirm Input
G	24Vdc Outut, 1A max.
H	24Vdc Return (com.)

SPX FAN CONNECTOR (A/C ONLY)

Controller Side; Female, 8 pins MS type
Tube Side; Male, 4 pins MS type

PIN (Control)	PIN (Tube Head)	SIGNAL
D	A	Fan 120Vac Line1
C	B	Fan 220Vac Tap
G	C	Fan 120Vac Line2/Neutral
B	D	Ground
E		N/C
F		N/C
A		Flow Interlock
H		Flow Interlock

SPX COOLER CONNECTOR (W/C ONLY)

Controller Side; Female, 8 pins MS type
Tube Side; Male, 8 pins MS type

PIN	SIGNAL
A	Flow Interlock
B	Ground
C	120/220Vac Line1 for Motor
D	120/220Vac Line2/Neutral for Motor
E	120Vac Motor Tap
F	120/220Vac Motor Tap
G	220Vac Motor Tap
H	Flow Interlock

SPX160 TUBE HEAD CONNECTOR

Controller Side; Female, 10 pins MS type
Tube Side; Male, 10 pins MS type

PIN	SIGNAL
A	Interlock Temperature/Pressure
B	Ground
C	Ground
D	HV Transformer
E	mA Feedback
F	Filament Transformer
G	kV Feedback
H	kV Feedback Return (GND)
I	Filament Transformer
J	HV Transformer

SPX200/300 TUBE HEAD CONNECTOR

Controller Side; Female, 14 pins MS type
Tube Side; Male, 14 pins MS type

PIN	SIGNAL
A	Interlock Temperature/Pressure SPX200, N/C SPX300
B	Ground
C	Ground
D	HV Transformer
E	mA Feedback
F	Filament Transformer
G	kV Feedback
H	kV Feedback Return (GND)
I	Filament Transformer
J	HV Transformer
K	N/C
L	Interlock Temperature/Pressure SPX300, N/C SPX200
M	N/C
N	N/C

Spellman High Voltage Electronics Corporation
Corporate Headquarters
Hauppauge, New York USA
+1-631-630-3000 FAX: +1-631-435-1620
e-mail: sales@spellmanhv.com
www.spellmanhv.com
128121-001 REV. K
Spellman High Voltage is an ISO 9001 and ISO 14001 registered company
Copyright © 2017 Spellman High Voltage Electronics Corp.

OPTIONAL ACCESSORIES

GUI Control Software for the SPX

GUI is specifically designed for controlling SPX series systems. As an alternative to the front panel control, the GUI will allow the user to control all necessary functions of the system from a user-friendly windows based menu. Additionally the GUI can be used as a diagnostic tool when the system is controlled via the front panel.

- ***Automatic warm-up of the X-Ray tube***
- ***Timed or Continuous Exposure modes***
- ***Fault and status monitor***

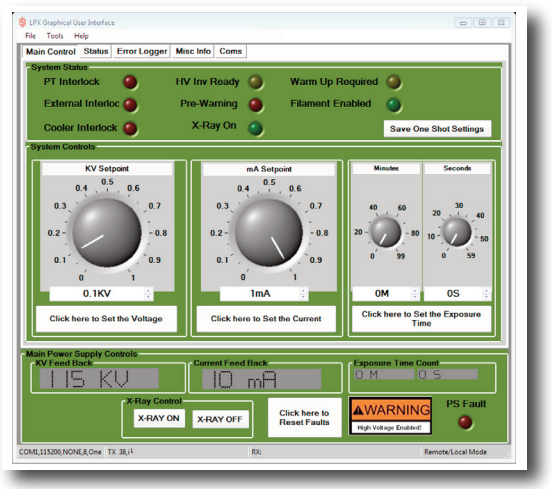



Laser Pointer



Spellman's exclusive Laser Pointer allows pinpoint image area targeting. The Laser Pointer projects a highly visible reference laser beam from the tubehead to surfaces up to 75 feet away, showing precisely where the central X-Ray beam will be located, providing unmatched accuracy for greater efficiency and reduced set-up times.

Tubehead Stand



An optional X-Ray Tubehead Stand allows for quick set up and provides rigid support for optimal image quality with three-axis positioning of the tube head assembly. The stand incorporates telescoping legs, a hand wheel-driven variable height adjustment and lockable hand wheel controlling the tubehead tilt and horizontal rotation. The tubehead cradle is cushioned for secure mounting and vibration damping. A bubble-type indicator is included for quick and easy leveling of the tubehead. Black anodized aluminum construction. 35lbs. (16kg) approx.

Air Cooled Tube Head Assembly



The air cooled tube head assembly uses a heat sink and high volume fan to dissipate heat from the anode and typically is used in applications that do not have limited access and are not in a volatile fuel vapor atmosphere. The air cooled tube head assembly does not require the cooler unit and the associated mixing and maintenance of liquid coolant. This unit requires less user maintenance and could be considered more environmentally friendly.

Panoramic Tube Head Assembly



The panoramic tube head assembly comes in a liquid cooled version only and produces radiation in a 360 degree cone making it ideal for aircraft FOD inspection, inspection of tanks or pipes or any application that requires circumferential radiographic inspection.

Spellman High Voltage Electronics Corporation
Corporate Headquarters
Hauppauge, New York USA
+1-631-630-3000 FAX: +1-631-435-1620
e-mail: sales@spellmanhv.com
www.spellmanhv.com
128121-001 REV. K
Spellman High Voltage is an ISO 9001 and ISO 14001 registered company
Copyright © 2017 Spellman High Voltage Electronics Corp.

SPX160

DIMENSIONS: in.[mm]

CONTROL UNIT TOP VIEW

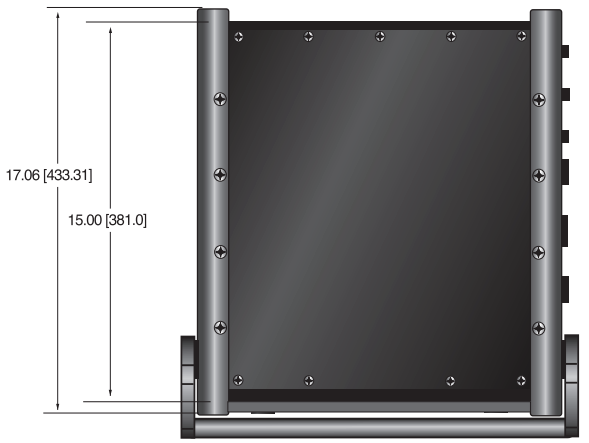

COOLER TOP VIEW

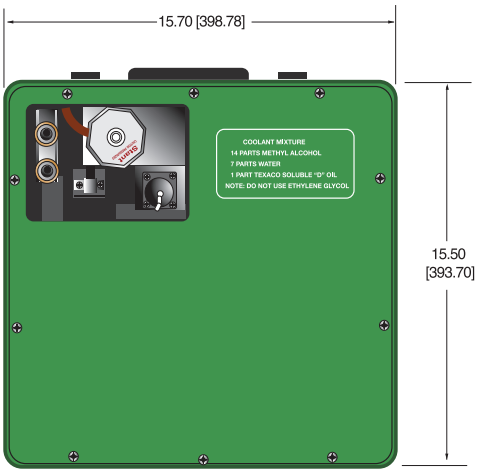

SPX160 TUBE HEAD SIDE VIEW

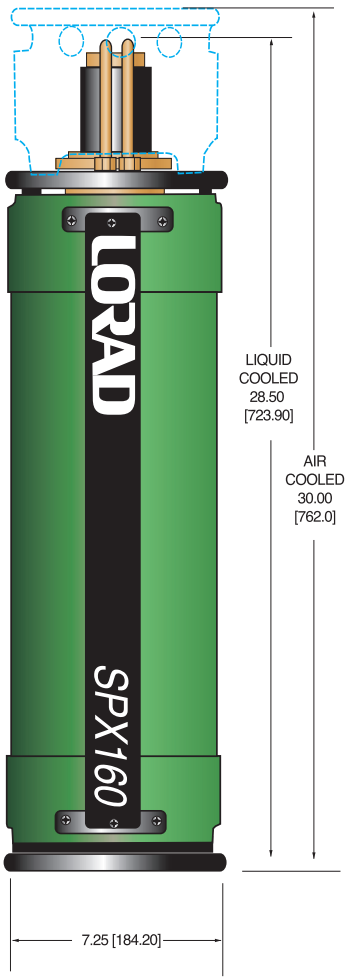

FRONT VIEW

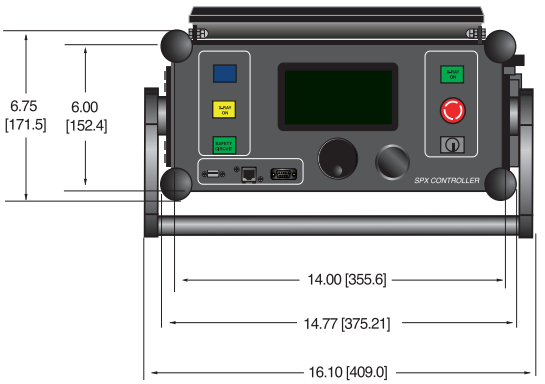

FRONT VIEW

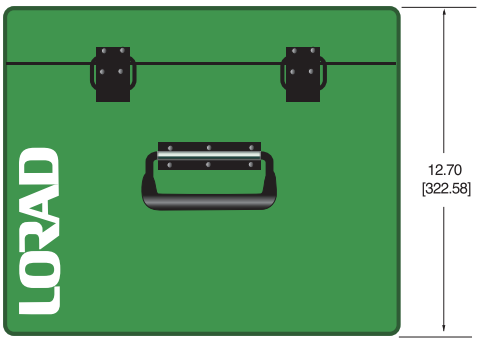

SIDE VIEW

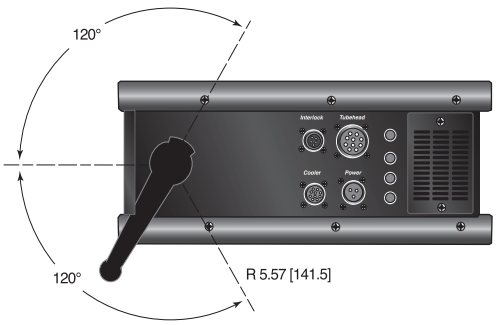

SIDE VIEW

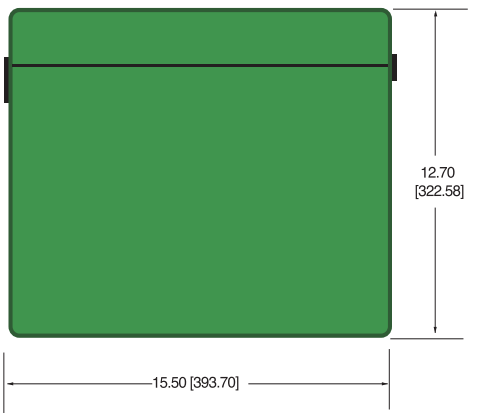

Copyright © 2017 Spellman High Voltage Electronics Corp.

SPX200

DIMENSIONS: in.[mm]

CONTROL UNIT TOP VIEW

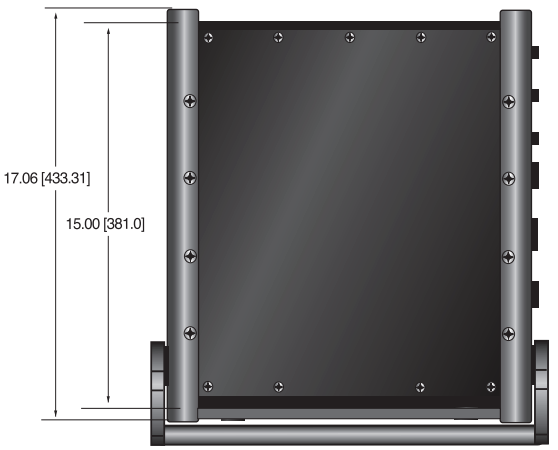

COOLER TOP VIEW

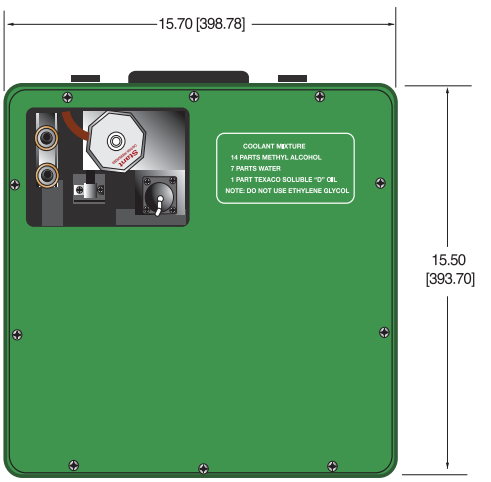

SPX200 TUBE HEAD SIDE VIEW

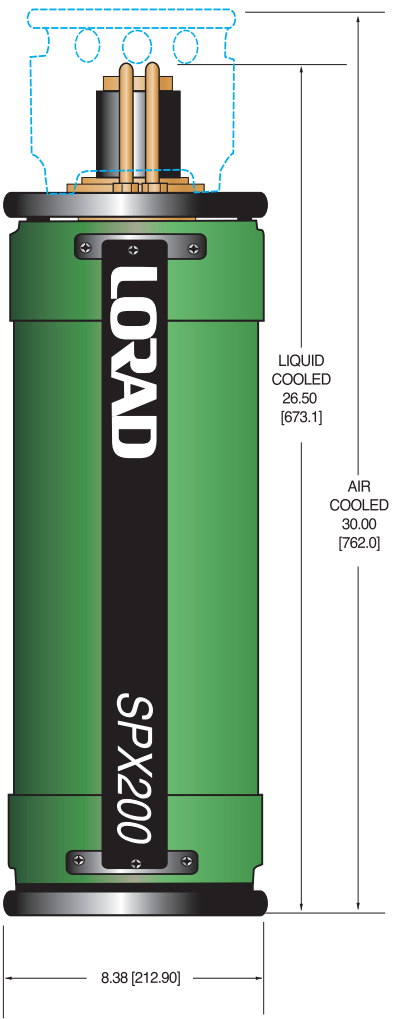

FRONT VIEW

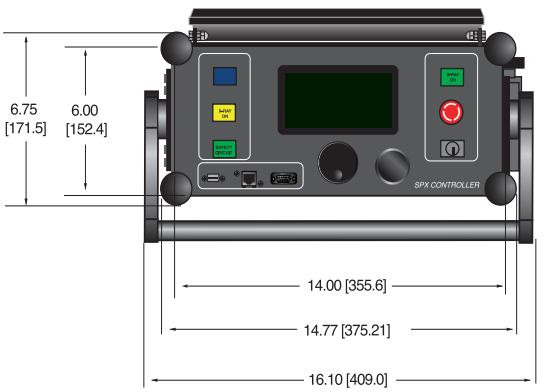

FRONT VIEW

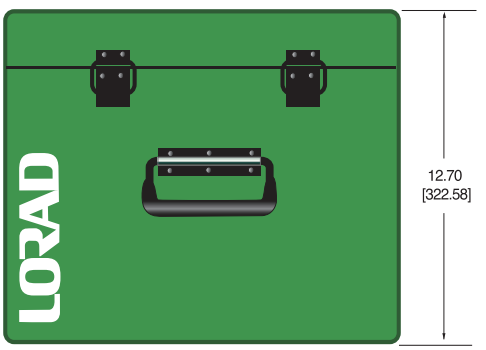

SIDE VIEW

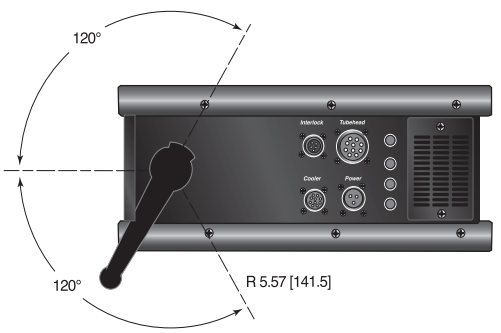

SIDE VIEW

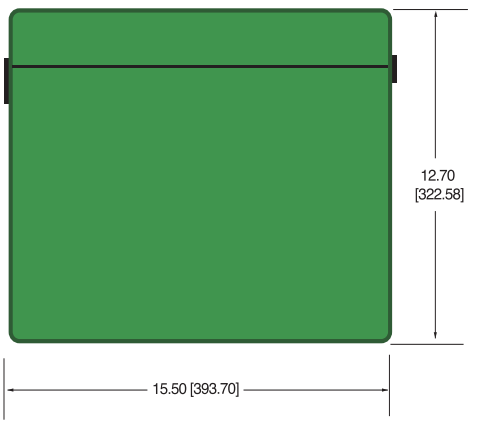

Copyright © 2017 Spellman High Voltage Electronics Corp.

SPX300

DIMENSIONS: in.[mm]

CONTROL UNIT
TOP VIEW

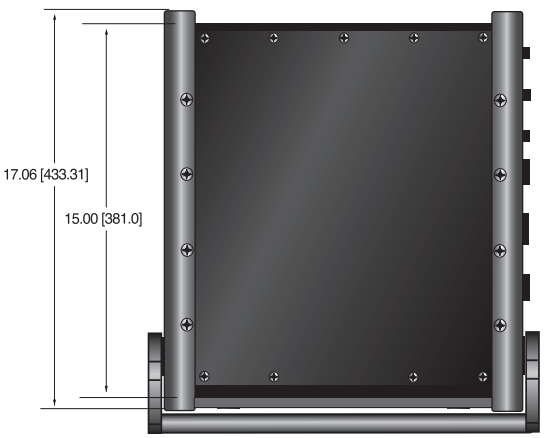

COOLER
TOP VIEW

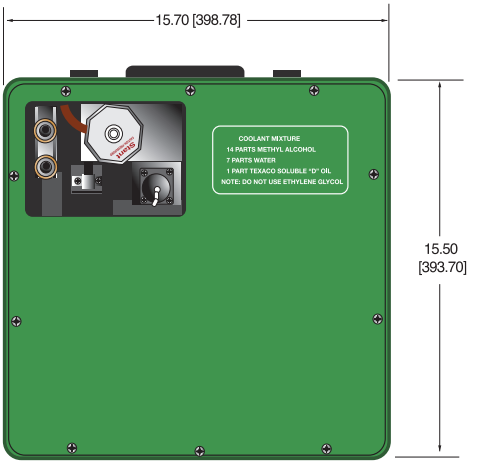

SPX300
TUBE HEAD
SIDE VIEW

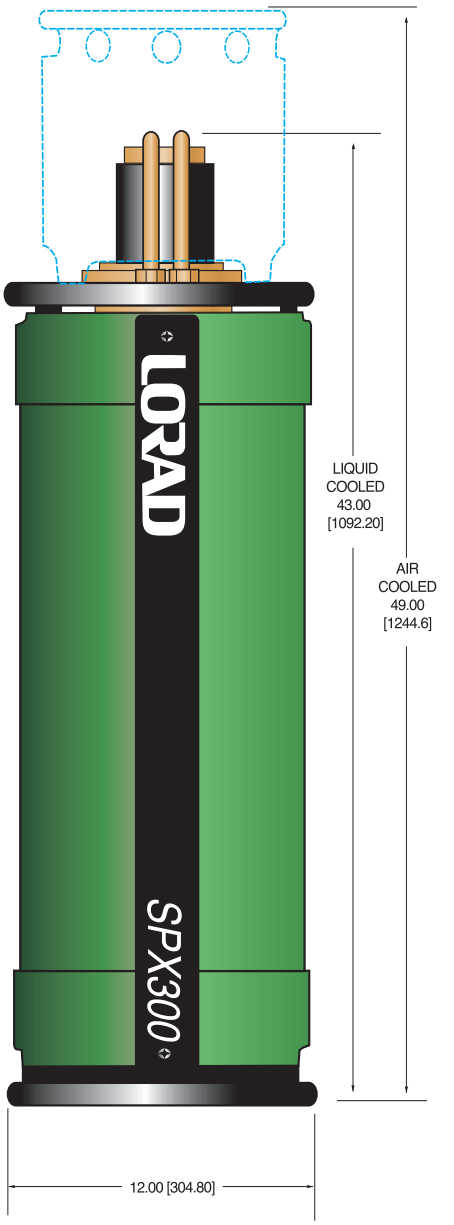

FRONT VIEW

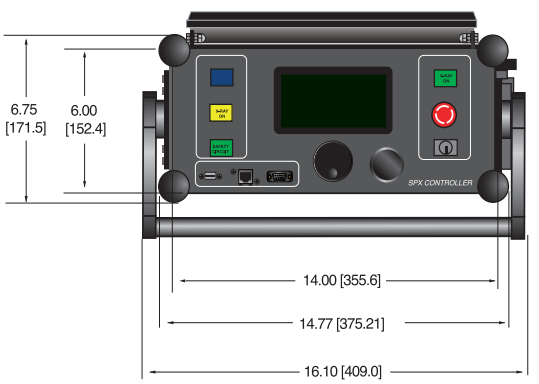

FRONT VIEW

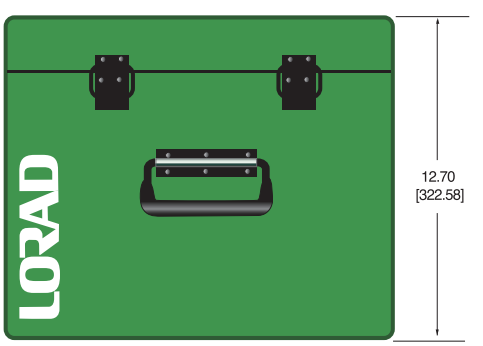

SIDE VIEW

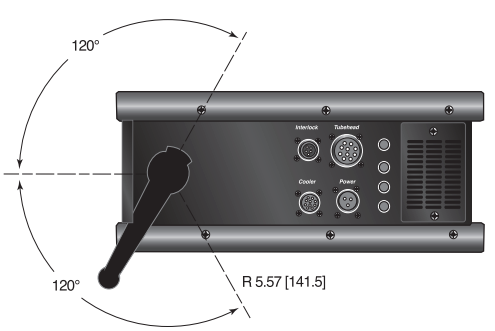

SIDE VIEW

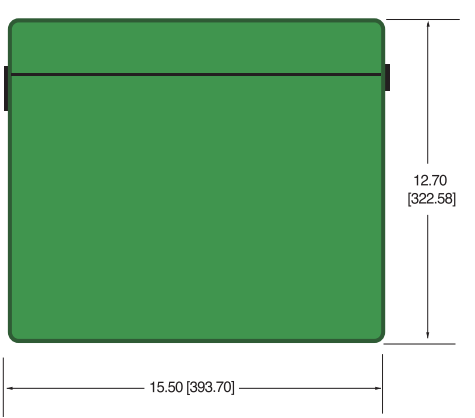

Spellman High Voltage Electronics Corporation
Corporate Headquarters
Hauppauge, New York USA
+1-631-630-3000 FAX: +1-631-435-1620
e-mail: sales@spellmanhv.com
www.spellmanhv.com
128121-001 REV. K
Spellman High Voltage is an ISO 9001 and ISO 14001 registered company
Copyright © 2017 Spellman High Voltage Electronics Corp.